Bridge Rectifier Modules For Reliable Inverter Designs

Bridge rectifiers include every branch of a rectifier topology in a single, compact case. Bridge rectifiers exist from a few amps to several hundred amps in different package types.

SEMIKRON offers bridge rectifier modules in single phase or 3-phase topology with or without brake chopper. The bridge rectifier modules are available in different packages such as SEMiX, SEMITOP, SEMIPONT, Power Bridge and MiniSKiiP.

MiniSKiiP	122
SEMITOP	124
SEMIPONT	128
SEMiX	132
Power Bridge	134

For detailed information please refer to data sheets.

Further information: www.semikron.com/bridge-rectifier-modules

SEMITOP®/SEMIPONT®/MiniSKiiP®

Rectifier with Brake Chopper

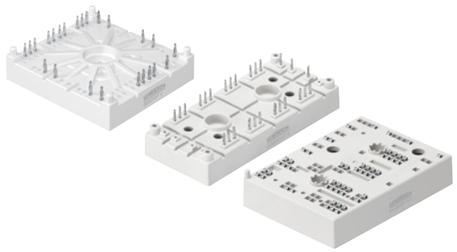

600V up to 1800V

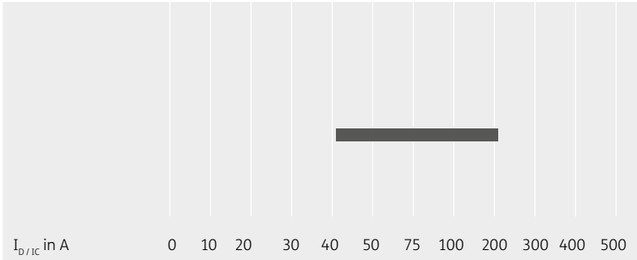

SEMITOP®/SEMIPONT®/SEMiX®/ Power Bridge

Three Phase Rectifier

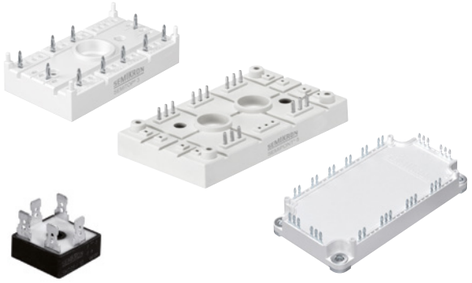

200V up to 2200V

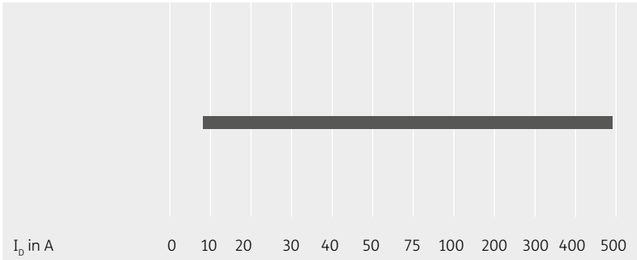

SEMIPONT®/SEMITOP®/ Power Bridge

Single Phase Rectifier

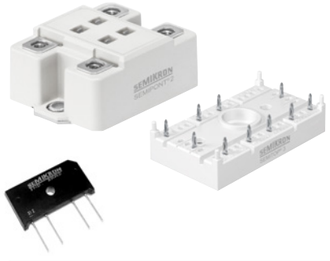

100V up to 2200V

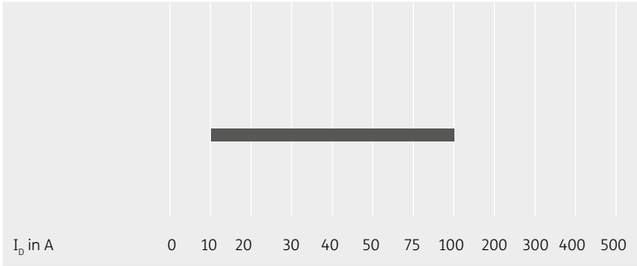

Bridge Rectifier Modules / MiniSKiiP

Type	V_{RRM} V_{DRM} V	I_F@T_S A	T_S °C	$I_{FSM/TSM}$@T_S=25°C A	$V_{T(TO)}$ V	r_T@T_{jmax} mΩ	T_j °C	Package	Thermal Interface Material	Topology
3-phase Rectifier										
SKiiP 28AN16V2 2)	1200	86	70	890	0.83	6	-40 ... +150	II 2	P12, HPTP	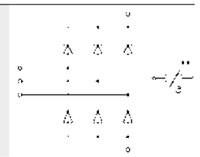
SKiiP 39AN16V1 1)	1600	179	70	3200	0.83	2.5	-40 ... +150	II 3	P12, HPTP	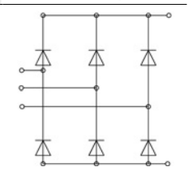
SKiiP 39AH16V1 1)	1600	112	70	2900	0.85	2.4	-40 ... +130	II 3	P12, HPTP	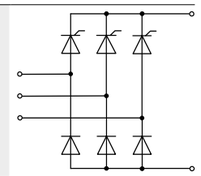
3-phase Rectifier + Chopper										
SKiiP 28ANB16V1	1600	83	70	1000	0.8	7	-40 ... +150	II 2	P12, HPTP	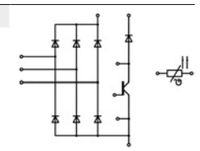
SKiiP 28ANB16V2	1600	83	70	1000	0.8	7	-40 ... +150	II 2	P12, HPTP	
SKiiP 28ANB16V10	1600	83	70	1000	0.8	7	-40 ... +150	II 2	P12, HPTP	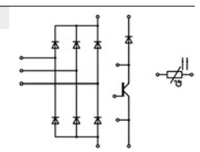
SKiiP 28ANB18V3 2)	1800	98	70	1000	0.965	3.4	-40 ... +150	II 2	P12, HPTP	
SKiiP 28AHB16V1	1600	82	70	1000	0.85	7	-40 ... +125	II 2	P12, HPTP	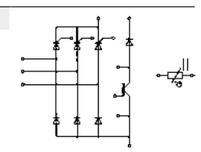
SKiiP 39AHB16V1	1600	121	70	1250	0.85	4	-40 ... +125	II 3	P12, HPTP	
SKiiP 39ANB16V1	1600	124	70	1600	0.8	4	-40 ... +150	II 3	P12, HPTP	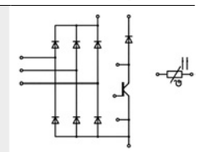

Footnotes: 1) Sample status / 2) In production new

Bridge Rectifier Modules / MiniSKiiP

Type	V_{RRM} V_{DRM} V	I_F@T_S A	T_S °C	$I_{FSM/TSM}$@T_S=25°C A	$V_{T(TO)}$ V	r_T@T_{jmax} mΩ	T_j °C	Package	Thermal Interface Material	Topology
3-phase Rectifier + Chopper										
SKiiP 39AHB16V3 1)	1600	126	70	1250	0.85	2.8	-40 ... +130	II 3	P12, HPTP	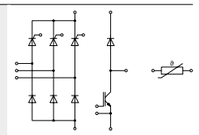

Footnotes: 1) Sample status / 2) In production new

Packages

MiniSKiiP II 2

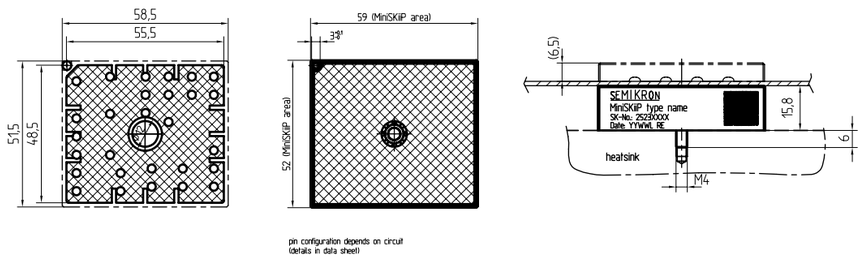

MiniSKiiP II 3

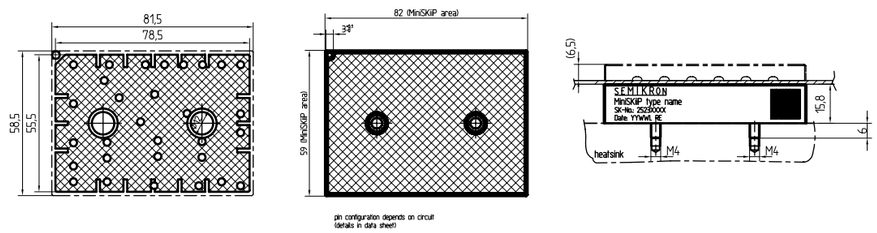

Dimensions in mm

Bridge Rectifier Modules / SEMITOP

Type	V_{RRM} V_{DRM} V	I_D @ T_S A	T_S °C	I_{TSM} I_{FSM}@T_{jmax} A	$V_{T(TO)}$@T_{jmax} V	r_T@T_{jmax} mΩ	T_j °C	Package	Thermal Interface Material	Topology
1 and 3 phase										
SK 50 B 06 UF	600	46	80	400	0.80	11.00	-40 ... +150	2	P12	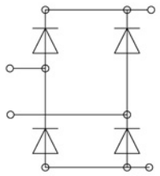
SK 50 B	800-1600	51	80	270	0.8	13.00	-40 ... +150	2	P12	
SK 55 B 06 F	600	54	80	440	0.9	16.00	-40 ... +150	2	P12	
SK 55 B 12 F	1200	57	80	550	1.20	22.00	-40 ... +150	2	P12	
SK 70 B	800-1600	68	80	560	0.8	11.00	-40 ... +150	2	P12	
SK 100 B	800-1600	100	80	890	0.83	3.90	-40 ... +150	2	P12	
SK 40 DT	800-1600	42	80	280	1.1	20.00	-40 ... +125	3	P12, HPTP	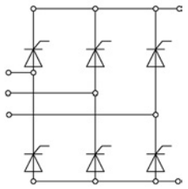
SK 70 DT	800-1600	68	80	380	1	10.00	-40 ... +125	3	P12, HPTP	
SK 55 D	800-1600	55	80	200	0.8	13.00	-40 ... +150	2	P12	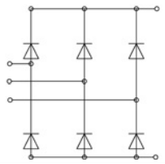
SK 70 D	800-1600	70	80	270	0.8	13.00	-40 ... +150	2	P12	
SK 80 D 12F [4]	1200	80	80	550	1.2	22.00	-40 ... +150	3	P12, HPTP	
SK 95 D	800-1600	95	80	560	0.8	11.00	-40 ... +150	2	P12	
SK 95 D 16p [2]	1600	95	80	560	0.8	11.00	-40 ... +150	2p	P12	
SK 40 DH	800-1600	42	80	270	1.1	20.00	-40 ... +150	3	P12, HPTP	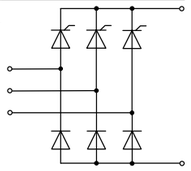
SK 70 DH	800-1600	68	80	270	1	10.00	-40 ... +125	3	P12, HPTP	
SK 55 DGL 126	1200	55	80	370	0.80	13.00	-40 ... +150	3	P12, HPTP	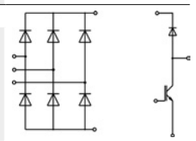
SK 95 DGL 126	1600	96	80	700	0.8	11.00	-40 ... +150	3	P12, HPTP	
SK 170 DHL 126 [1]	1200	170	70	1000	0.8	7.00	-40 ... +150	4	P12, HPTP	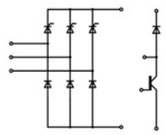
SK 200 DHL 066 [1]	600	210	70	1250	0.8	4.00	-40 ... +150	4	P12, HPTP	
SK 40 BHL 066T [2]	1600	42	42	280	0.85	20.00	-40 ... +130	3	P12, HPTP	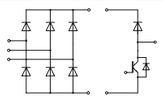
SK150DGL12T4 [1]	1200	49	-	-	0.83	-	-40 ... +150	3	P12, HPTP	
SK40BBB07TD1E2 [1]	650	42	42	-	1.1	20.00	-40 ... +125	E2	HPTP, HT	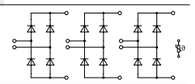

Footnotes: 1) Sample status / 2) In production new / 4) Discontinued

Bridge Rectifier Modules / SEMITOP

Type	V_{RRM} V_{DRM} V	I_D @ T_S A	T_S °C	I_{TSM} I_{FSM}@T_{jmax} A	$V_{T(TO)}$@T_{jmax} V	r_T@T_{jmax} mΩ	T_j °C	Package	Thermal Interface Material	Topology
1 and 3 phase										
SK60B12TUFE1 [1]	650	51	-	-	-	-	-40 ... +175	E1	-	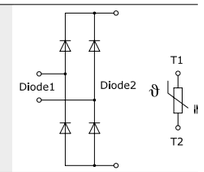
SK225BV07S5D1E2 [1]	800	135	-	1250	0.83	3.09	-40 ... +130	E2	HPTP, HT	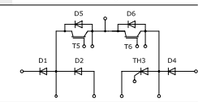
SK70B07TD1E1 [1]	650	68	68	560	0.8	11.00	-40 ... +150	E1	-	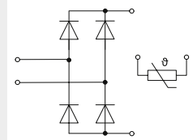
SK90DZNT16TE2	1600	56	-	1000	0.83	4.38	-40 ... +130	E2	HPTP, HT	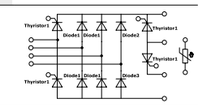

Footnotes: 1) Sample status / 2) In production new / 4) Discontinued

Packages

SEMITOP 2

Dimensions: mm
Tolerance system: ISO 2768-m

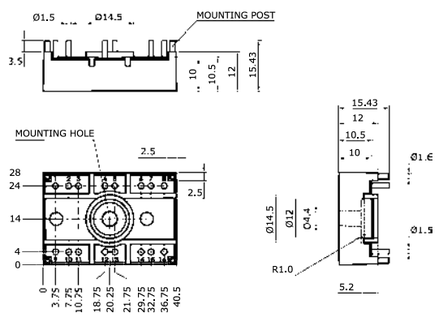

SEMITOP 2 Press-Fit

Dimensions: mm
Tolerance system: ISO 2768-m

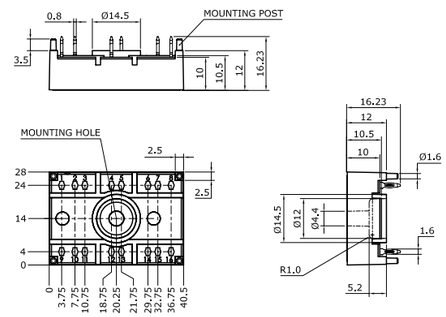

Dimensions in mm

Bridge Rectifier Modules / SEMITOP

Packages

SEMITOP 3

Dimensions: mm
Tolerance system: ISO 2768-m

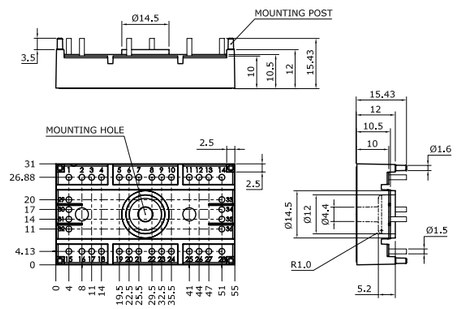

SEMITOP 4

Dimensions: mm
Tolerance system: ISO 2768-m

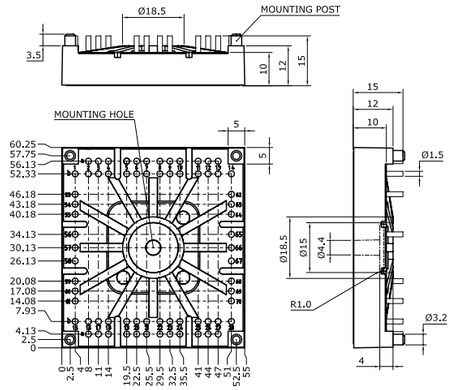

Dimensions in mm

Packages

SEMITOP E1

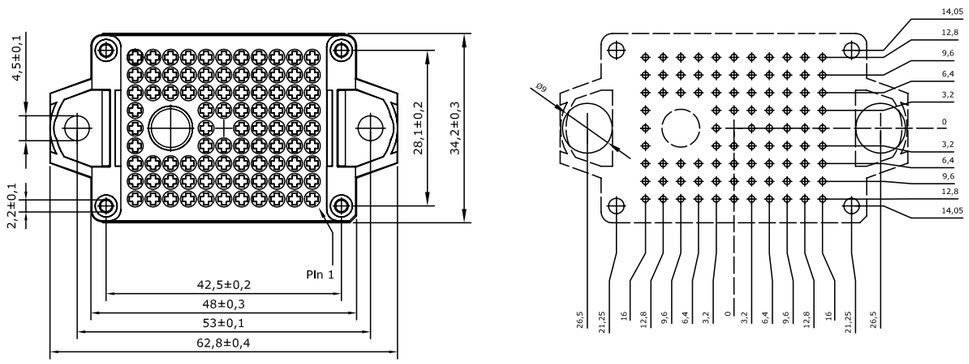

Dimensions in mm

Bridge Rectifier Modules / SEMITOP

Packages

SEMITOP E2

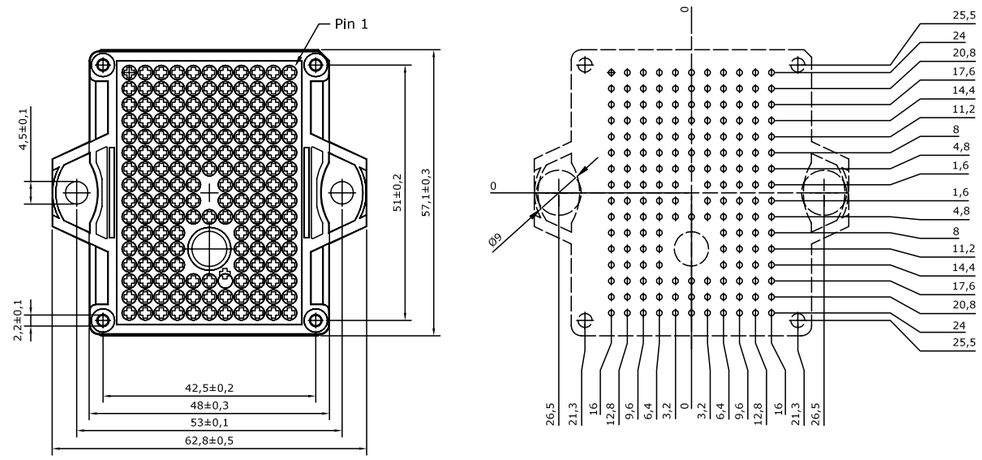

Dimensions in mm

Bridge Rectifier Modules / SEMIPONT

Type	V_{RRM} V_{DRM} V	I_D @ T_C A	T_C °C	I_{TSM} I_{FSM}@T_{jmax} A	$V_{T(TO)}$@T_{jmax} V	r_T@T_{jmax} mΩ	T_j °C	Package	Thermal Interface Material	Topology
1 and 3 phase										
SKB 28	200-1600	28	87	320	0.85	12.0	-40 ... +125	1	-	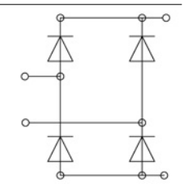
SKB 52	400-1800	50	99	425	0.85	8.0	-40 ... +150	3	-	
SKB 60	400-1600	60	88	850	0.85	5.0	-40 ... +125	2	-	
SKB 72	400-1800	70	101	640	0.85	5.0	-40 ... +150	3	-	
SKBH 28	600-1400	28	89	280	1	16.0	-40 ... +125	1	-	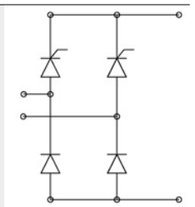
SKBZ 28	400-1400	28	89	280	1	16.0	-40 ... +125	1	-	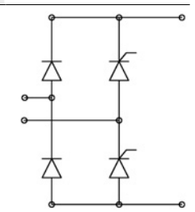
SKBT 28	600-1400	28	89	280	1	16.0	-40 ... +125	1	-	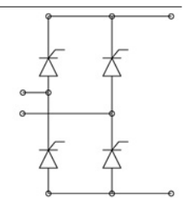
SKBT 40	800-1400	40	92	400	1	16.0	-40 ... +125	2	-	
SKCH 28	400-1400	28	89	280	1	16.0	-40 ... +125	1	-	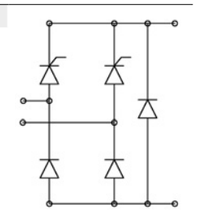
SKCH 40	400-1600	40	92	400	1	16.0	-40 ... +125	2	-	
SKDT 60	400-1400	60	86	400	1	16.0	-40 ... +125	2	-	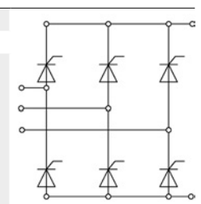
SKDT 115 [3]	1200-1600	110	80	950	1.1	6.0	-40 ... +125	5	-	
SKDT 145	1200-1600	145	80	1250	0.9	5.0	-40 ... +125	5	-	

Footnotes: 2) In production new / 3) Not for new designs

Bridge Rectifier Modules / SEMIPONT

Type	V_{RRM} V_{DRM} V	I_D @ T_C A	T_C °C	I_{TSM} I_{FSM}@T_{jmax} A	$V_{T(TO)}$@T_{jmax} V	r_T@T_{jmax} mΩ	T_j °C	Package	Thermal Interface Material	Topology
1 and 3 phase										
SKD 31	200-1600	31	100	320	0.85	12.0	-40 ... +125	1	-	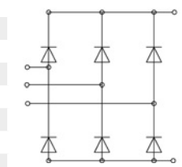
SKD 60	400-1600	60	102	850	0.85	5.0	-40 ... +125	2	-	
SKD 62	400-1800	60	110	425	0.85	8.0	-40 ... +150	3	-	
SKD 82	400-1800	80	110	640	0.85	5.0	-40 ... +150	3	-	
SKD 100	400-1600	100	93	1000	0.85	5.0	-40 ... +125	2	-	
SKD 110	800-1800	110	100	1000	0.85	4.0	-40 ... +150	4	-	
SKD 115	1200-1800	110	85	1150	0.8	7.0	-40 ... +150	5	-	
SKD 145	1200-1800	145	85	1700	0.8	4.0	-40 ... +150	5	-	
SKD 160	800-1800	205	85	1500	0.85	3.0	-40 ... +150	4	-	
SKD 210	900-1800	207	99	1600	0.85	3.0	-40 ... +150	4	-	
SKDH 100	800-1400	100	84	850	1	4.5	-40 ... +125	2	-	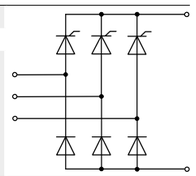
SKDH 115	1200-1600	110	80	950	1.1	6.0	-40 ... +125	5	-	
SKDH 145	1200-1600	145	80	1250	0.9	5.0	-40 ... +125	5	-	
3 phase with brake chopper										
SKD 116/..-L105 [2]	1200-1600	110	85	1050	0.8	7.0	-40 ... +125	6	-	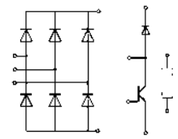
SKD 116/..-L140 [2]	1200-1600	110	85	1050	0.8	7.0	-40 ... +125	6	-	
SKD 146/..-L105 [2]	1200-1600	140	85	1250	0.8	4.0	-40 ... +125	6	-	
SKD 146/..-L140T4 [2]	1200-1600	140	85	1250	0.8	4.0	-40 ... +125	6	-	
SKDH 116/..L105 [2]	1200-1600	110	85	1000	0.8	7.0	-40 ... +125	6	-	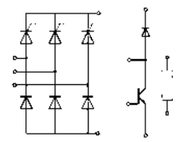
SKDH 116/..L140 [2]	1200-1600	110	85	1000	0.8	7.0	-40 ... +125	6	-	
SKDH 146/..-L105 [2]	1200-1600	140	85	1250	0.8	4.0	-40 ... +125	6	-	
SKDH 146/..-L140 [2]	1200-1600	140	85	1250	0.8	4.0	-40 ... +125	6	-	
SKD 146/16-L140	1600	140	-	1250	0.83	-	-40 ... +150	6	-	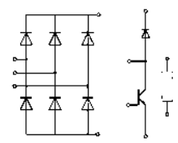
SKD 146/12-L140 [2]	1200	140	-	1250	0.83	-	-40 ... +150	6	-	

Footnotes: 2) In production new / 3) Not for new designs

Bridge Rectifier Modules / SEMIPONT

Packages

SEMIPONT 1

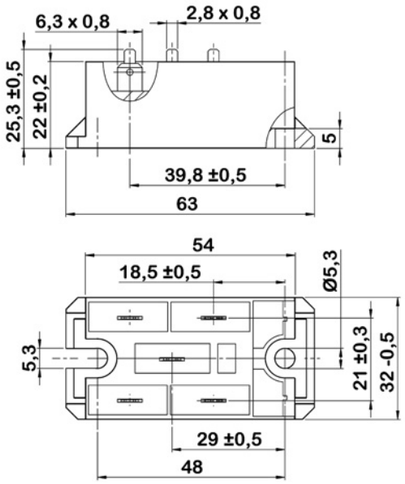

SEMIPONT 2

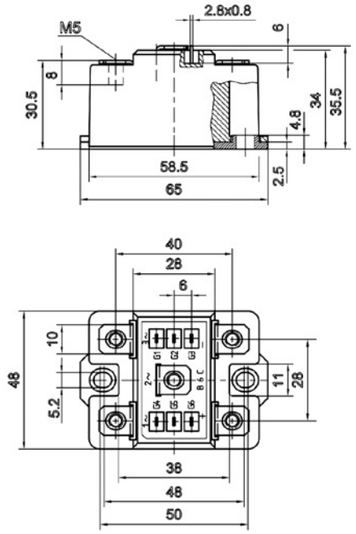

SEMIPONT 3

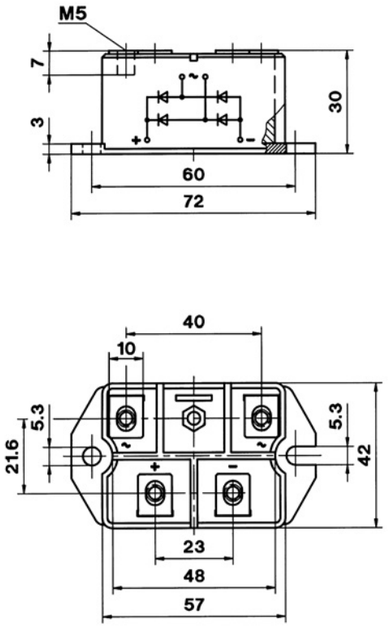

SEMIPONT 4

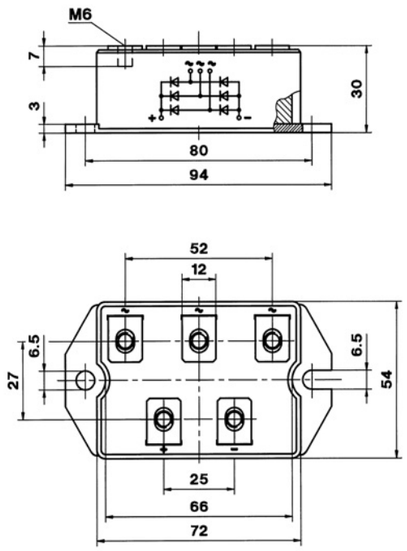

Dimensions in mm

Bridge Rectifier Modules / SEMIPONT

Packages

SEMIPONT 5

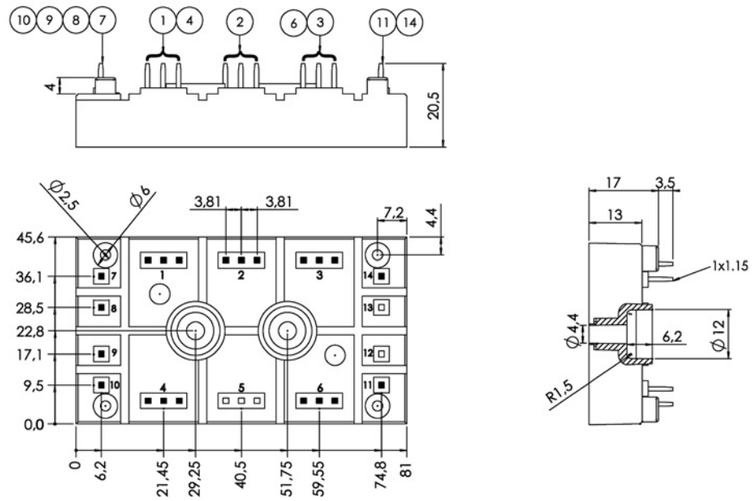

SEMIPONT 6

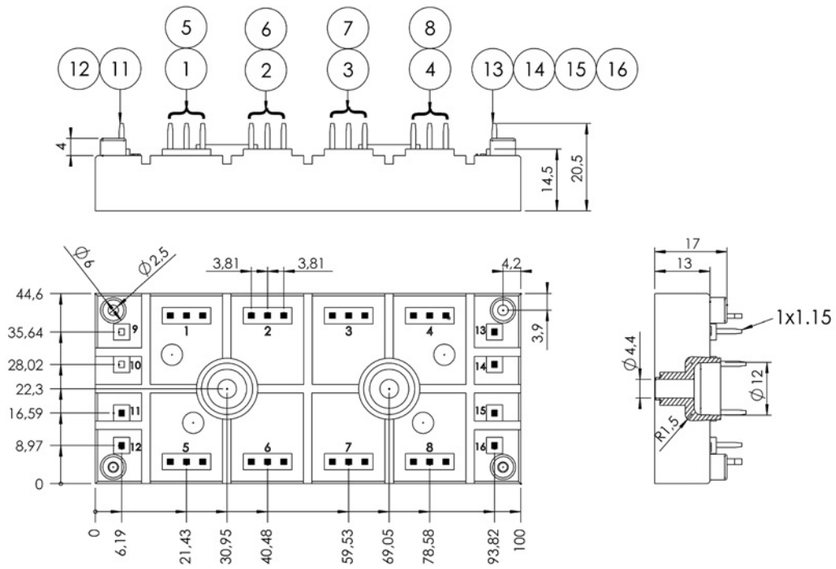

Dimensions in mm

Bridge Rectifier Modules / SEMiX

Type	V_{RRM} V_{DRM} V	I_D @ T_C A	T_C °C	I_{TSM} I_{FSM}@T_{jmax} A	$V_{T(TO)}$@T_{jmax} V	r_T@T_{jmax} mΩ	T_j °C	Package	Thermal Interface Material	Topology
3 phase										
SEMiX251D12Fs [3]	1200	256	85	1330	1.20	7	-40 ... +150	13	P8	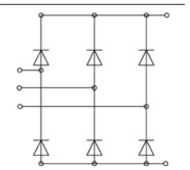
SEMiX291D16s	1600	232	85	1380	0.83	4.6	-40 ... +150	13	P8	
SEMiX341D16s	1600	348	85	2000	0.9	2.7	-40 ... +130	13	P8	
SEMiX501D17Fs	1700	494	85	2140	1.10	2.7	-40 ... +150	13	P8	
SEMiX586D16p [1]	1600	700	85	4200	0.916	1.4	-40 ... +175	6p	HT	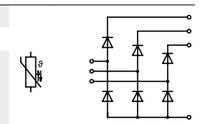
SEMiX636D16p [1]	1600	700	85	5500	0.916	1.3	-40 ... +175	6p	HT	
SEMiX526D22p [1]	2200	650	85	5300	0.834	1.4	-40 ... +150	6p	HT	
SEMiX241DH16s	1600	298	100	1800	0.85	3.4	-40 ... +130	13	P8	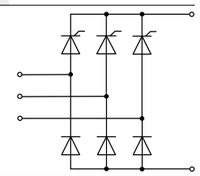
SEMiX245DH16 [2]	1600	336	96	1800	0.91	3.0	-40 ... +130	5p	P8, HT	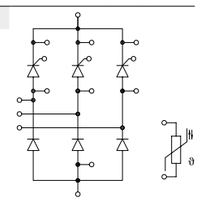
SEMiX365DH16 [2]	1600	484	96	2750	0.85	2.5	-40 ... +130	5p	P8, HT	

Footnotes: 1) Sample status / 2) In production new / 3) Not for new designs

Packages

SEMiX 6p

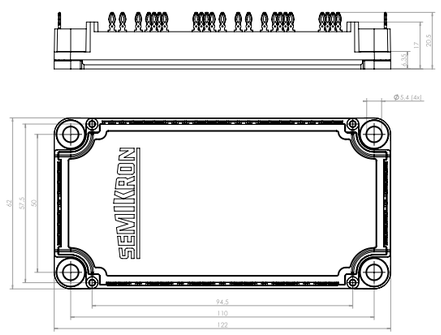

Dimensions in mm

Bridge Rectifier Modules / SEMiX

Packages

SEMiX 13

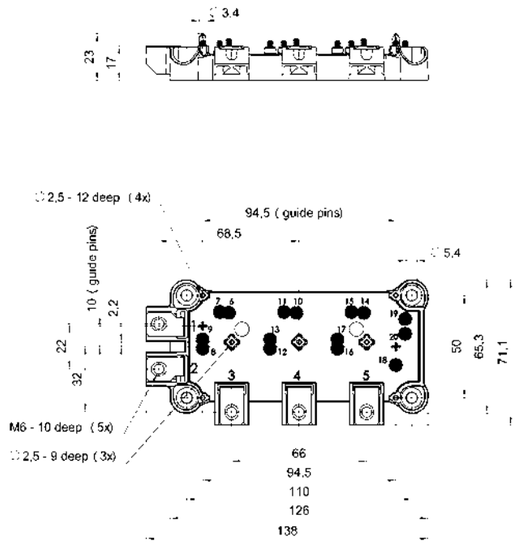

SEMiX 5p

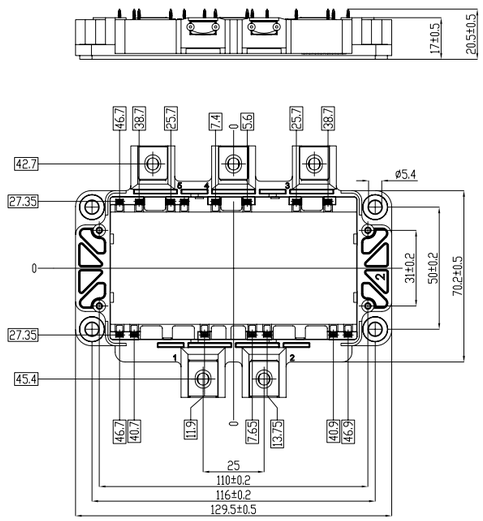

Dimensions in mm

Bridge Rectifier Modules / Power Bridge

Type	V_{RRM} V_{DRM} V	I_D @ T_C A	T_C °C	I_{FSM}@T_{jmax} A	$V_{T(TO)}$@T_{jmax} V	r_T@T_{jmax} mΩ	T_j °C	Package	Thermal Interface Material	Topology
1 phase										
SKB 25	100-1600	17	75	320	0.85	12.00	-40 ... +150	G 10b	-	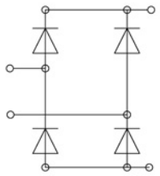
SKB 26	200-2000	18	75	320	0.85	12.00	-40 ... +150	G 50a	-	
SKB 30	200-1600	30	94	320	0.85	12.00	-40 ... +150	G 12, G 13	-	
SKB 35	400-1600	35	29	330	0.85	7.00	-40 ... +150	G 10b	-	
3 phase										
SKD 25	200-1600	20	73	320	0.85	12.00	-40 ... +150	G 11b	-	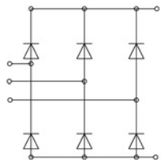
SKD 26	400-1600	20	73	320	0.85	12.00	-40 ... +150	G 50b	-	
SKD 30	200-1600	30	98	320	0.85	12.00	-40 ... +150	G 12, G 13	-	
SKD 33	400-1800	33	110	240	0.8	18.00	-40 ... +150	G55	-	
SKD 35	400-1600	36	70	320	0.85	7.00	-40 ... +150	G 11b	-	
SKD 35 AV	1200-1600	39	70	345	0.9	6.00	-40 ... +150	G 11b	-	
SKD 51	400-1800	50	127	700	0.8	8.50	-40 ... +150	G51	-	
SKD 53	400-1800	53	100	270	0.8	13.00	-40 ... +150	G55	-	
SKD 83	400-1800	83	95	560	0.8	7.50	-40 ... +150	G55	-	
DBI 6 P	400-2200	9	113	165	0.8	24.00	-40 ... +150	DBI P	-	
DBI 25 P	400-2200	27	32	310	0.85	9.00	-40 ... +150	DBI P	-	

Packages

G 10b, G 11b

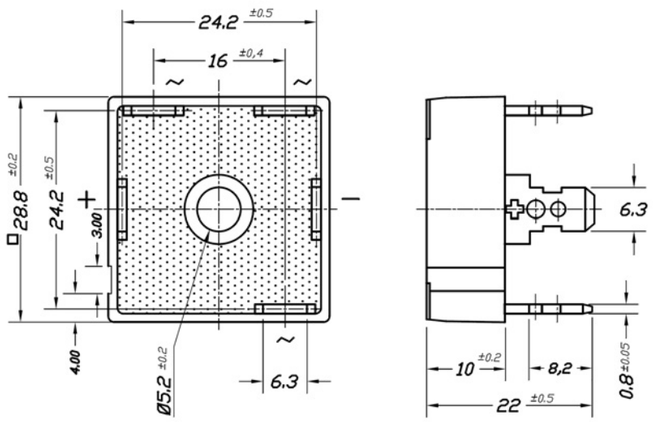

Dimensions in mm

Bridge Rectifier Modules / Power Bridge

Packages

G 50a, G 50b

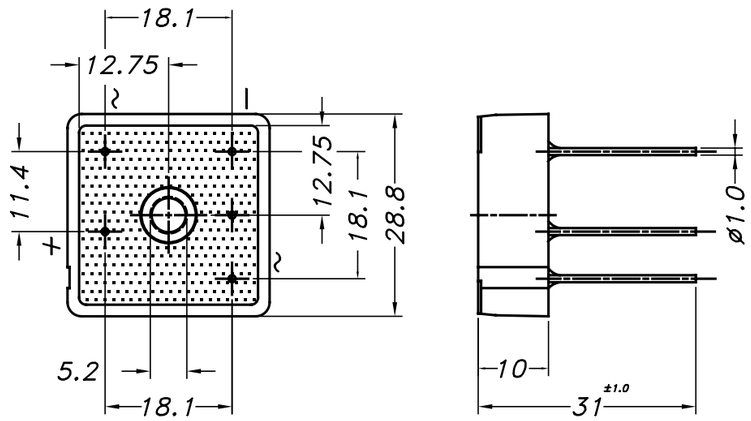

G 12, G 13

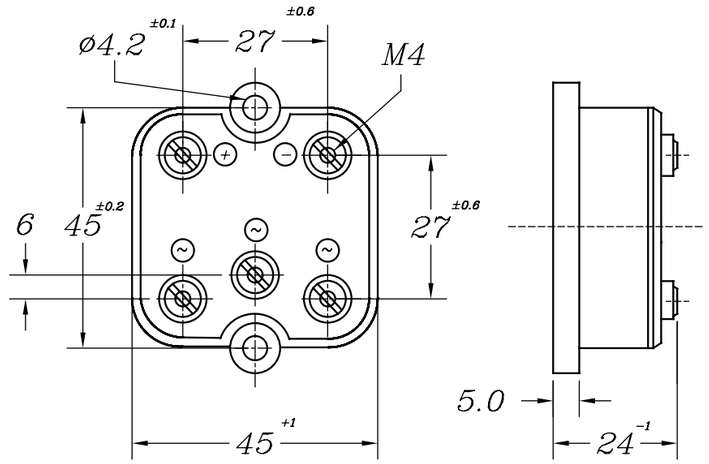

Dimensions in mm

Bridge Rectifier Modules / Power Bridge

Packages

G 51

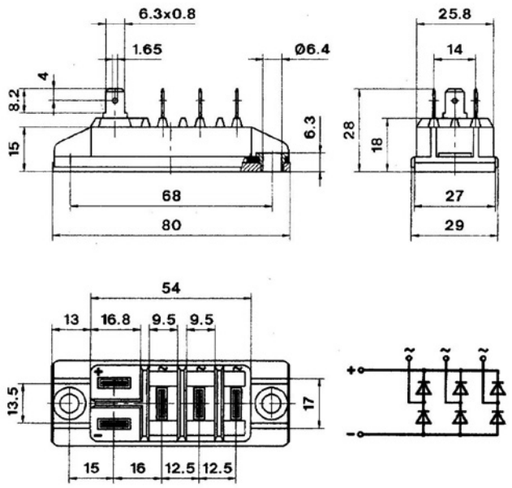

G 55

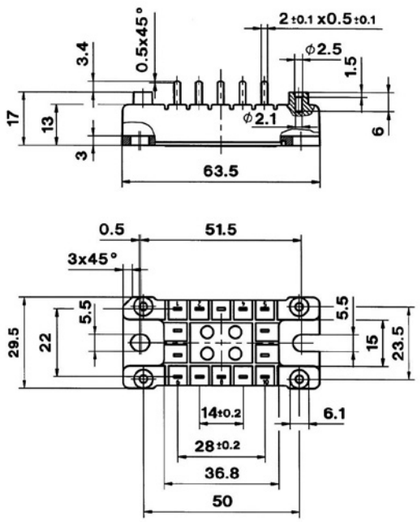

Dimensions in mm

Bridge Rectifier Modules / Power Bridge

Packages

DBI P

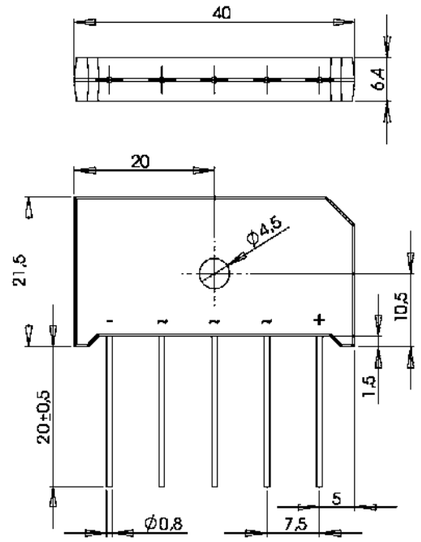

Dimensions in mm